REVISIONS			
REV.	DESCRIPTION	DRAWN BY	DATE
A	PROTOTYPE RELEASE	CJB	4/7/2023
B	FINAL PRODUCT WITH UPDATES FROM PROTOTYPE	CJB	8/8/2023

KEY FEATURES:

1. ALUMINUM ENCLOSURE CONSTRUCTION
2. TEMPERATURE AND HUMIDITY CONTROLLED ENVIRONMENT
3. SWAPPABLE, ROOF MOUNTED A/C
4. OUTLET AND MOUNTING PANEL FOR CUSTOMER SUPPLIED EQUIPMENT
5. PROJECTOR MOUNT DRAWER SLIDES FOR EASY INSTALLATION
6. FRONT AND SIDE ACCESS DOOR

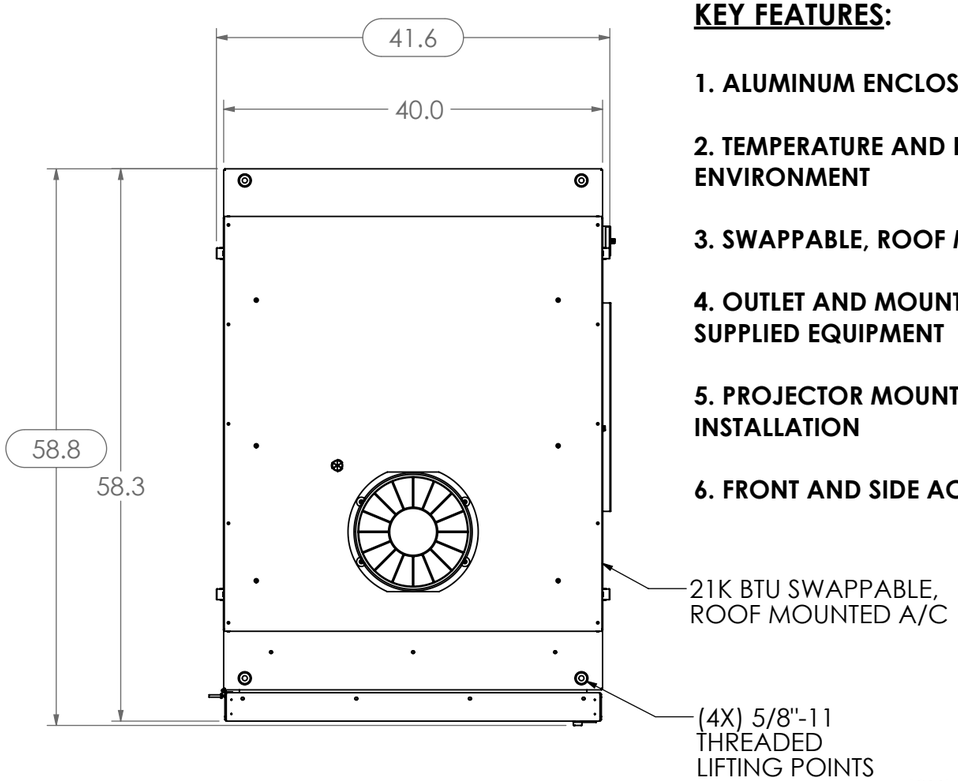

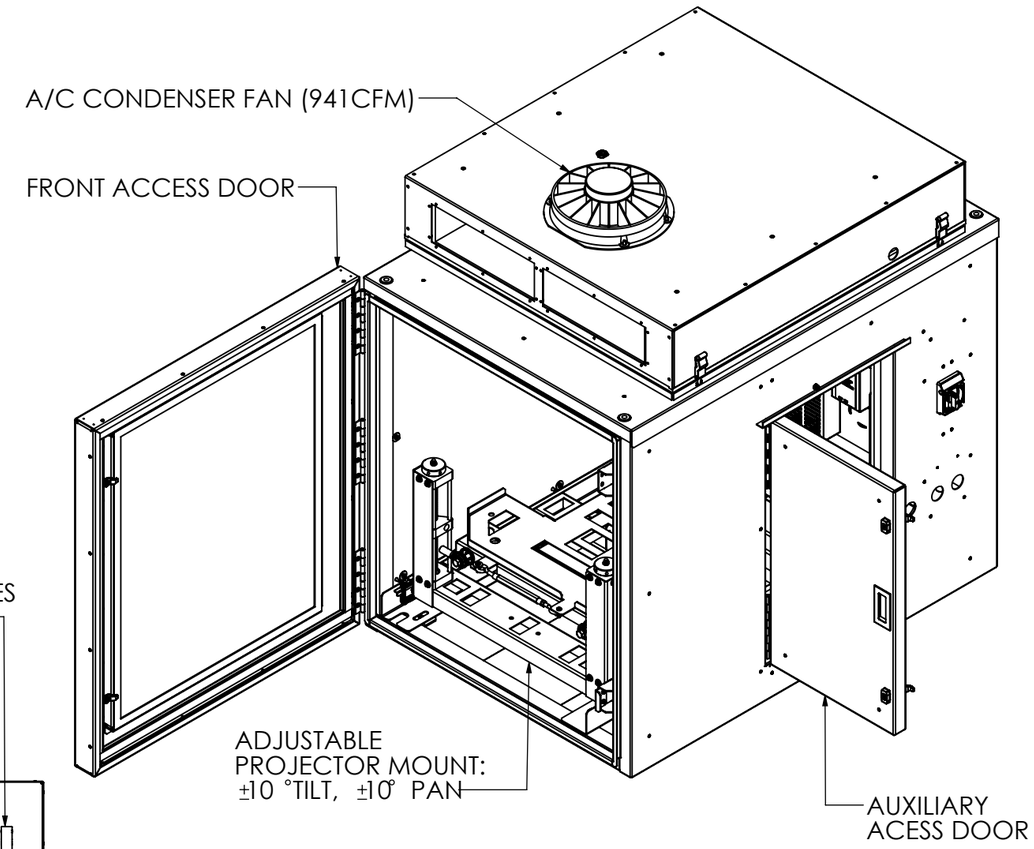

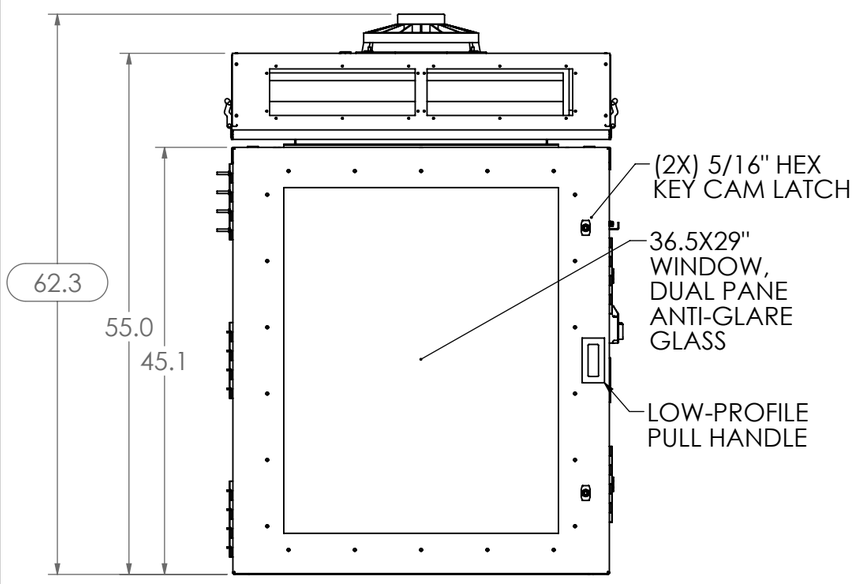

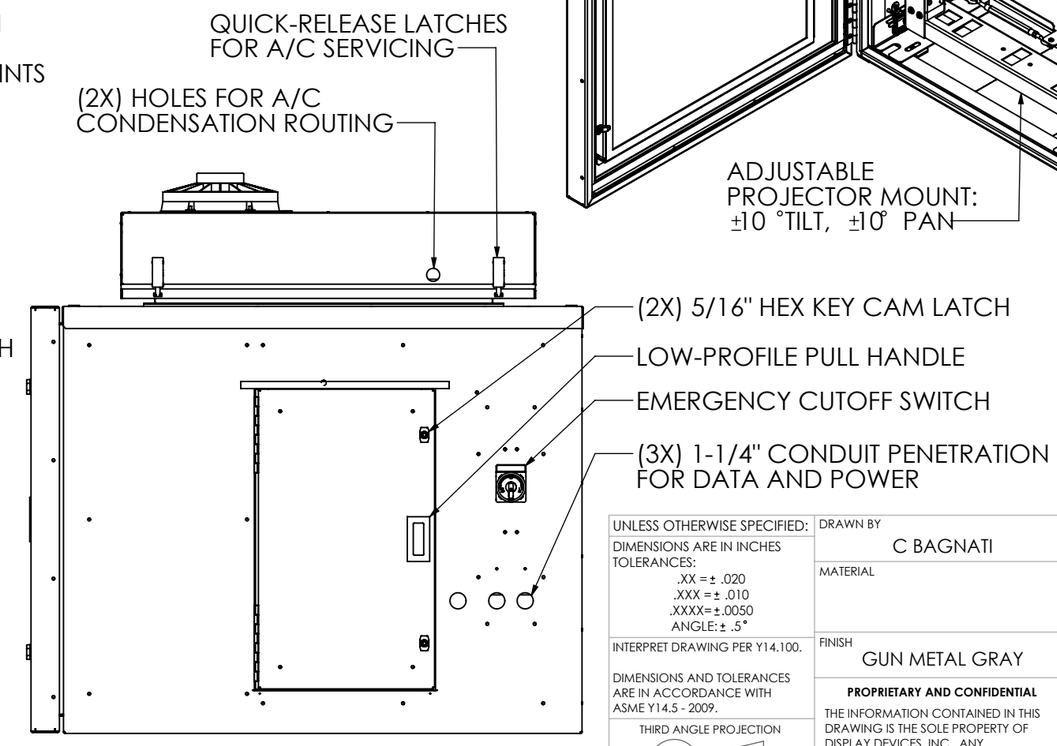

UNLESS OTHERWISE SPECIFIED:
DIMENSIONS ARE IN INCHES
TOLERANCES:
.XX = ± .020
.XXX = ± .010
.XXXX= ±.0050
ANGLE: ± .5°

INTERPRET DRAWING PER Y14.100.

DIMENSIONS AND TOLERANCES ARE IN ACCORDANCE WITH ASME Y14.5 - 2009.

THIRD ANGLE PROJECTION

DO NOT SCALE DRAWING

DRAWN BY: C BAGNATI

MATERIAL:

FINISH: GUN METAL GRAY

PROPRIETARY AND CONFIDENTIAL

THE INFORMATION CONTAINED IN THIS DRAWING IS THE SOLE PROPERTY OF DISPLAY DEVICES, INC. ANY REPRODUCTION IN PART OR AS A WHOLE WITHOUT THE WRITTEN PERMISSION OF DISPLAY DEVICES, INC IS PROHIBITED.

DISPLAY DEVICES, INC
GOLDEN, CO

TITLE:
CHRISTIE GRIFFYN 4K50 PJE, SINGLE, LANDSCAPE

SIZE	DWG. NO.	REV
B	8105-05700	B

SCALE: 1:16 | SHEET 1 OF 3

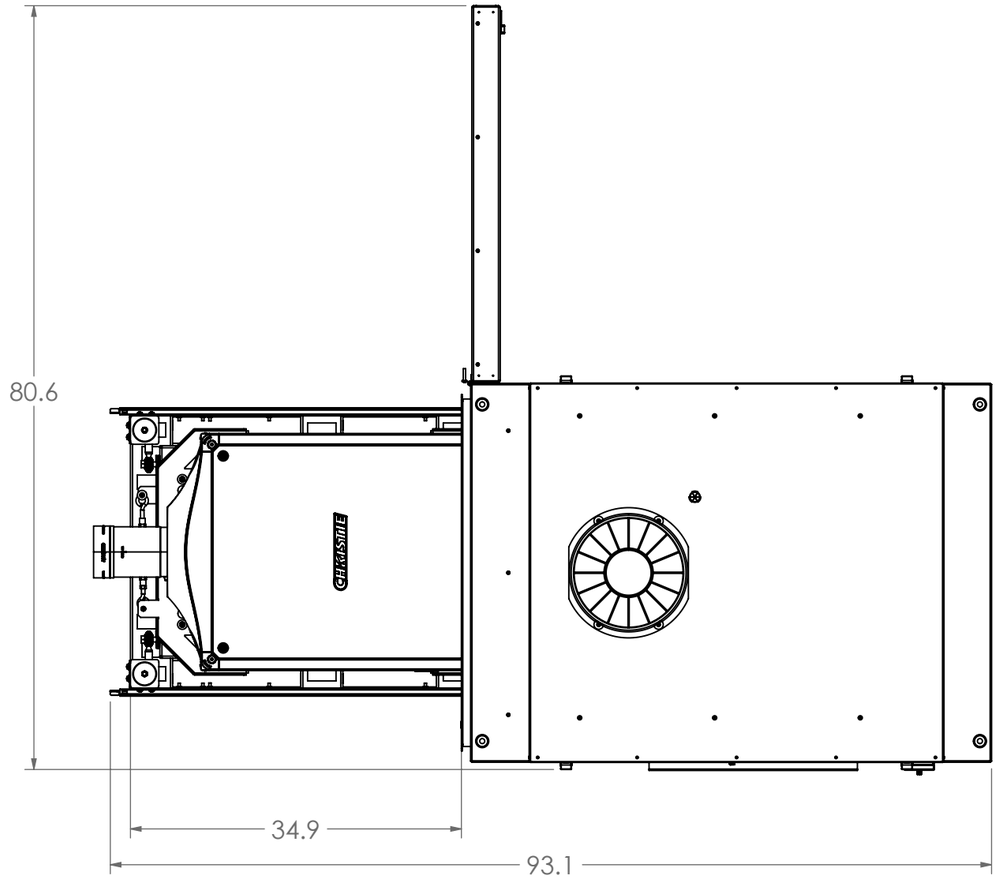

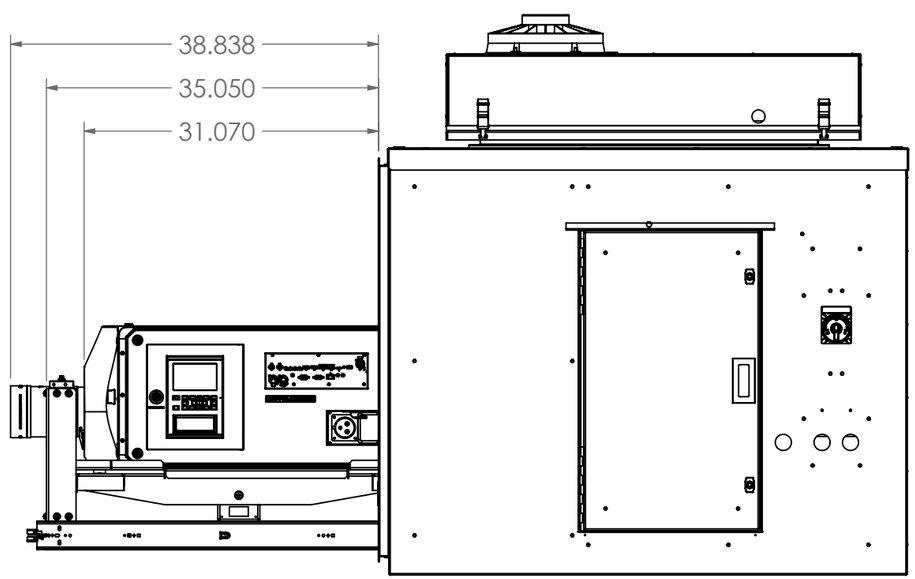

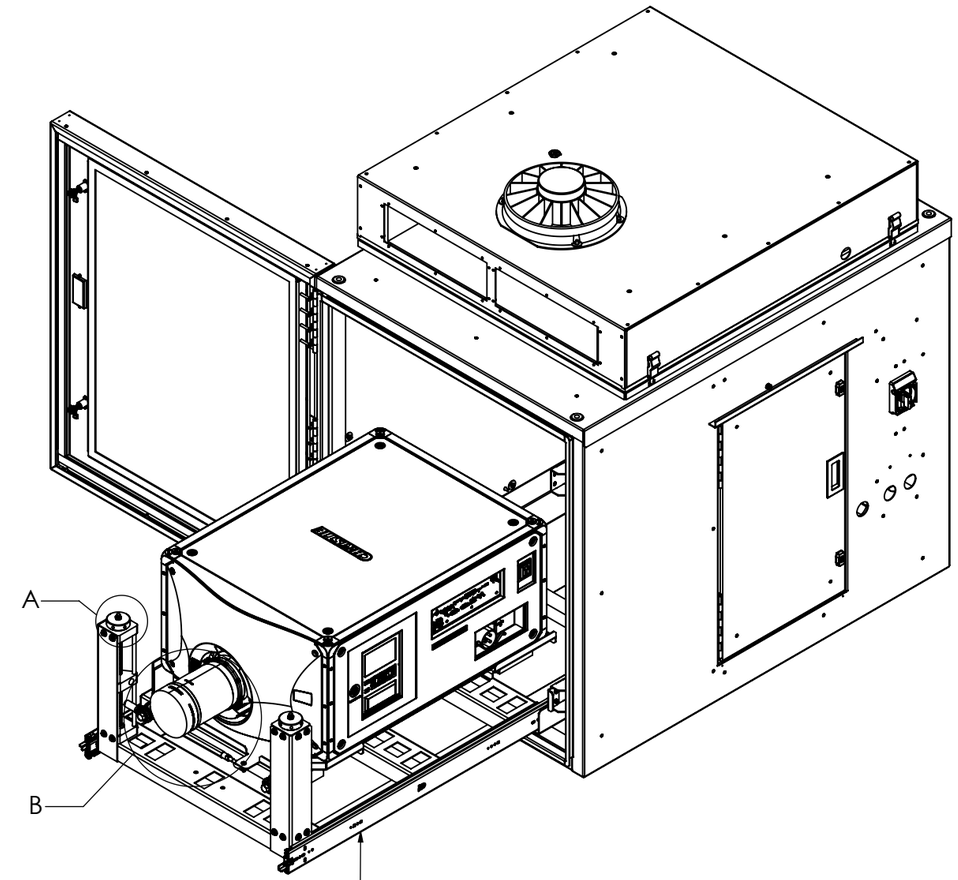

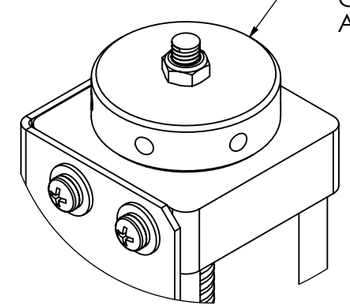

DETAIL A
SCALE 1 : 2

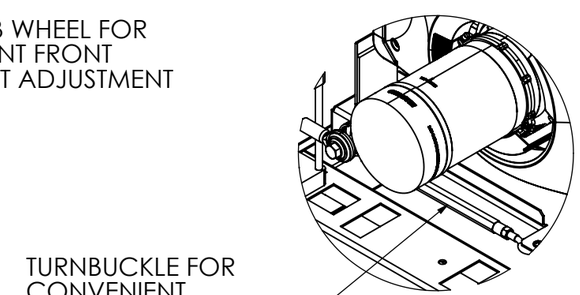

DETAIL B
SCALE 1 : 8

SIZE	DWG. NO.	REV
B	8105-05700	B
SCALE: 1:16		SHEET 2 OF 3

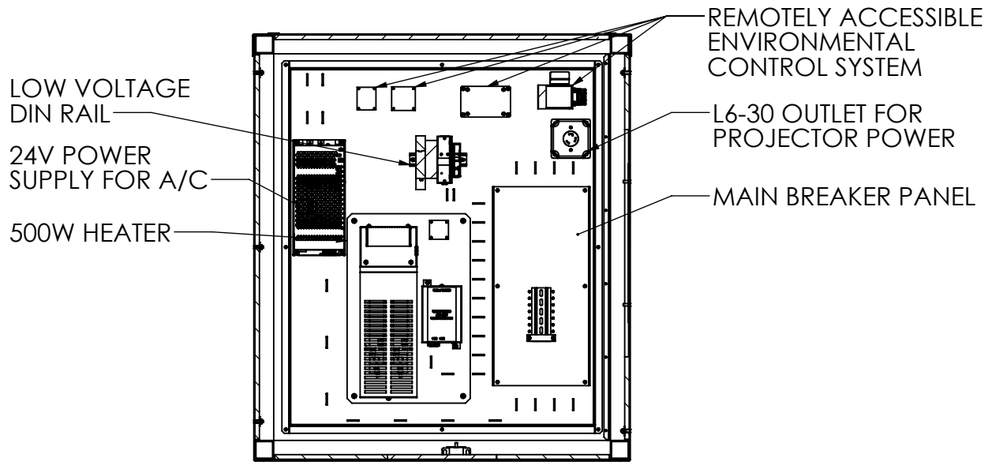

SECTION C-C

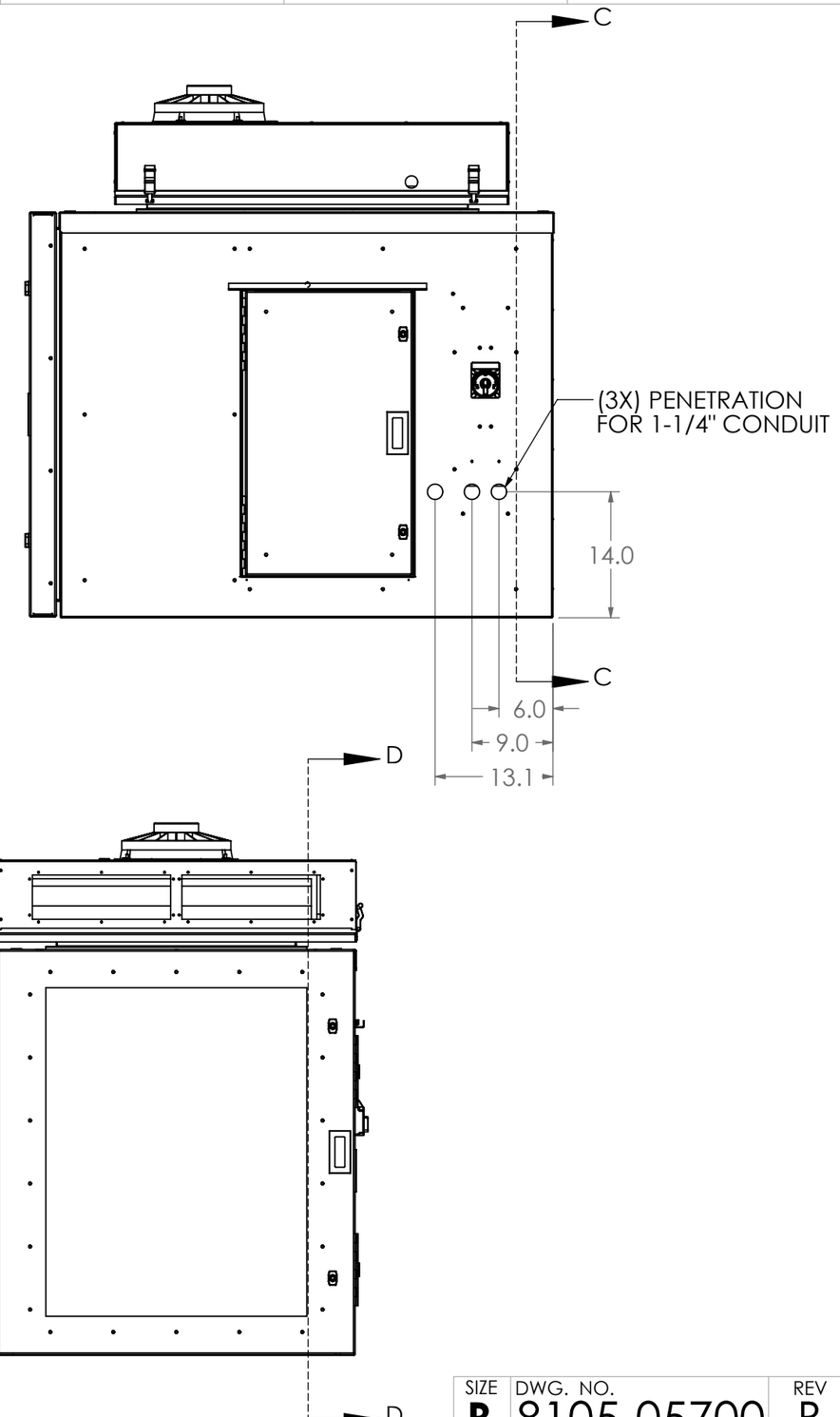

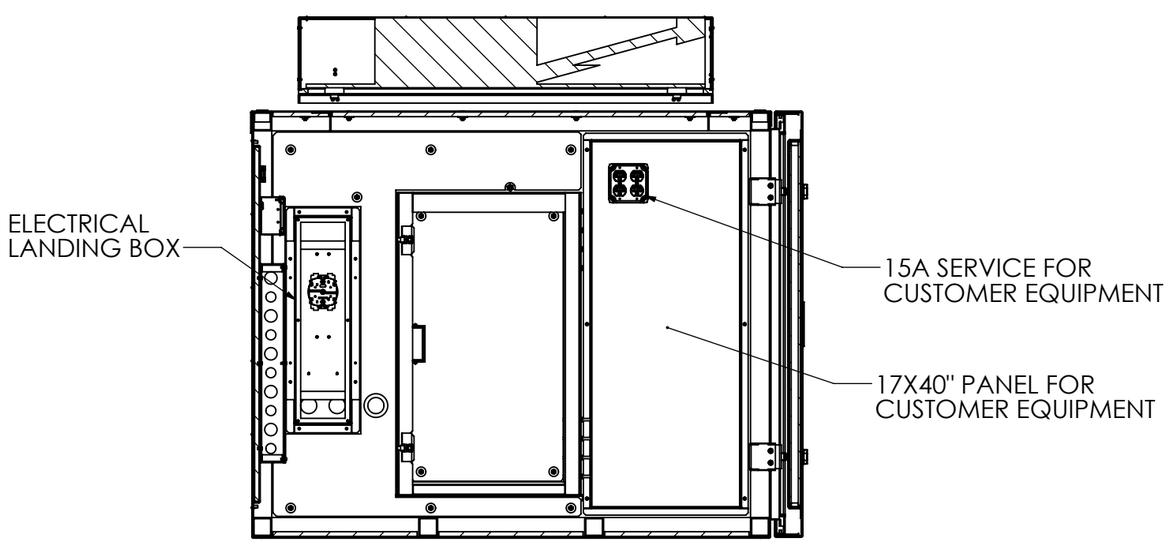

SECTION D-D

SIZE	DWG. NO.	REV
B	8105-05700	B
SCALE: 1:16		SHEET 3 OF 3